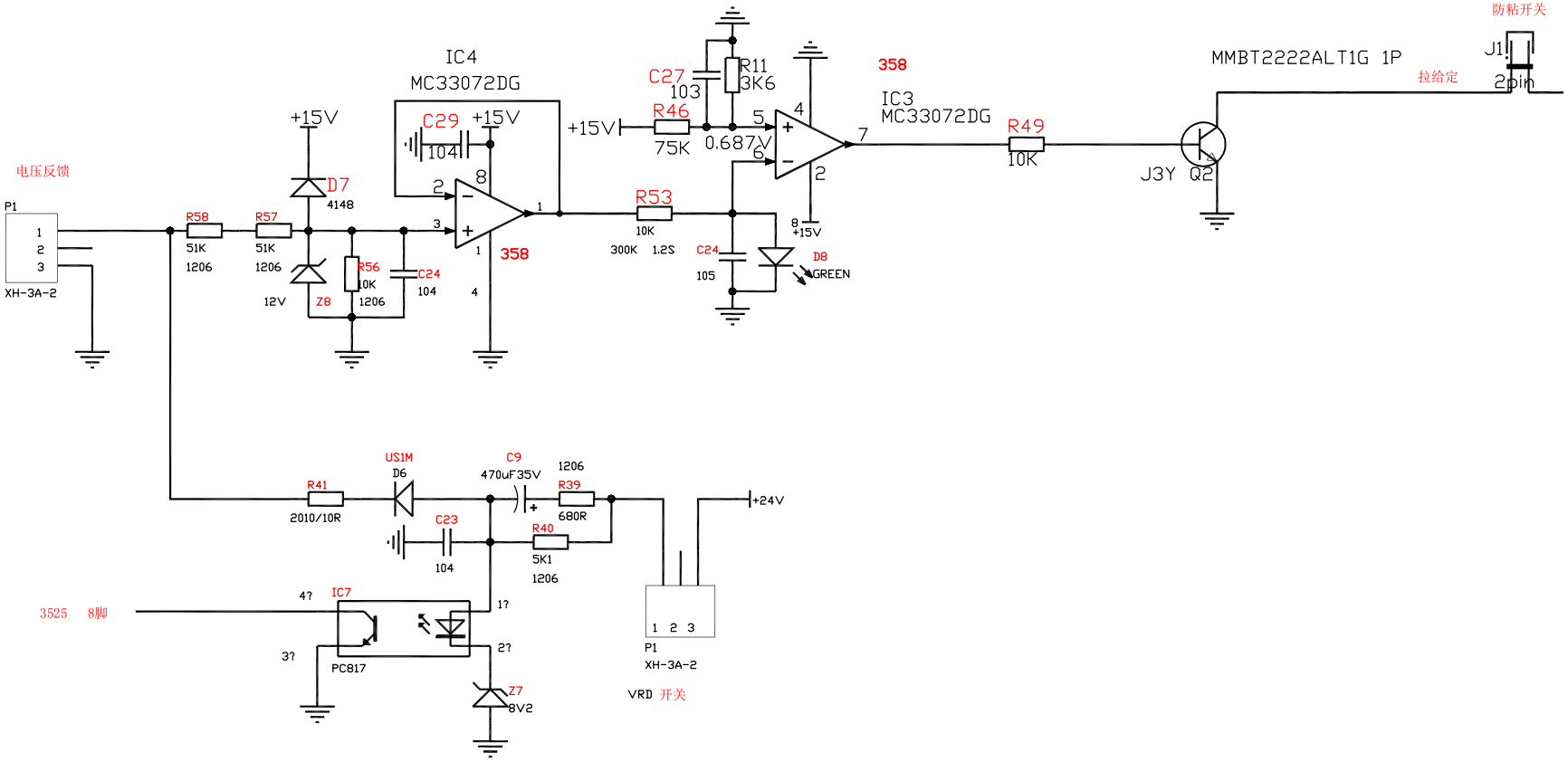

Title		
Size A4	Number	Revision
Date: 2022/10/11 ???	Sheet of	
File: F:\2022t?y????9.28\..\VRD+??TF_A01.SCHDOC	Drawn By:	